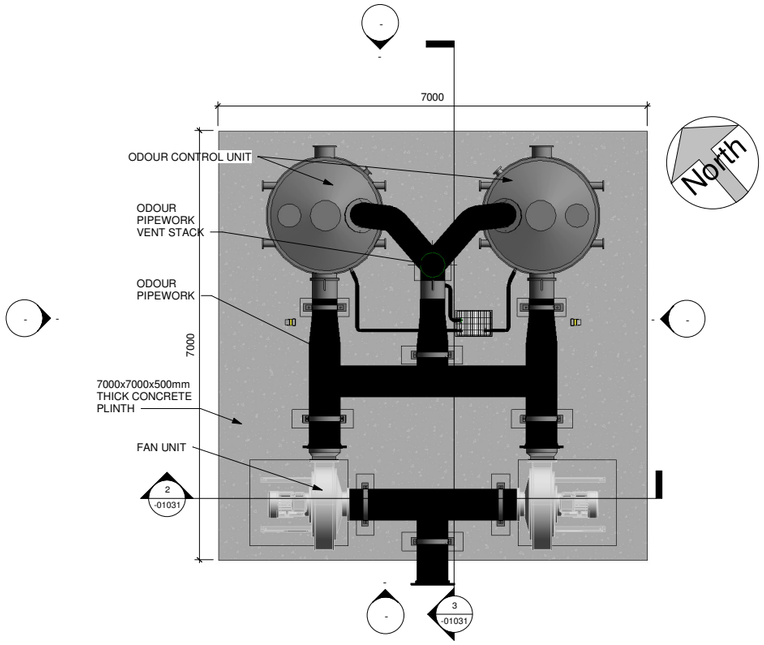

1 Plan Layout @ Plinth
1 : 50

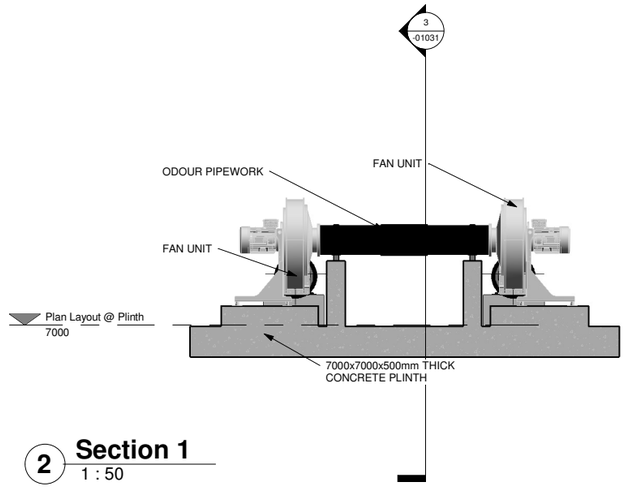

2 Section 1
1 : 50

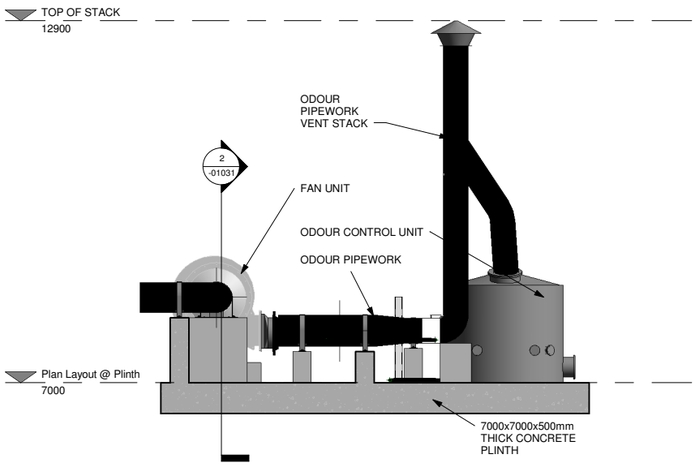

3 Section 2
1 : 50

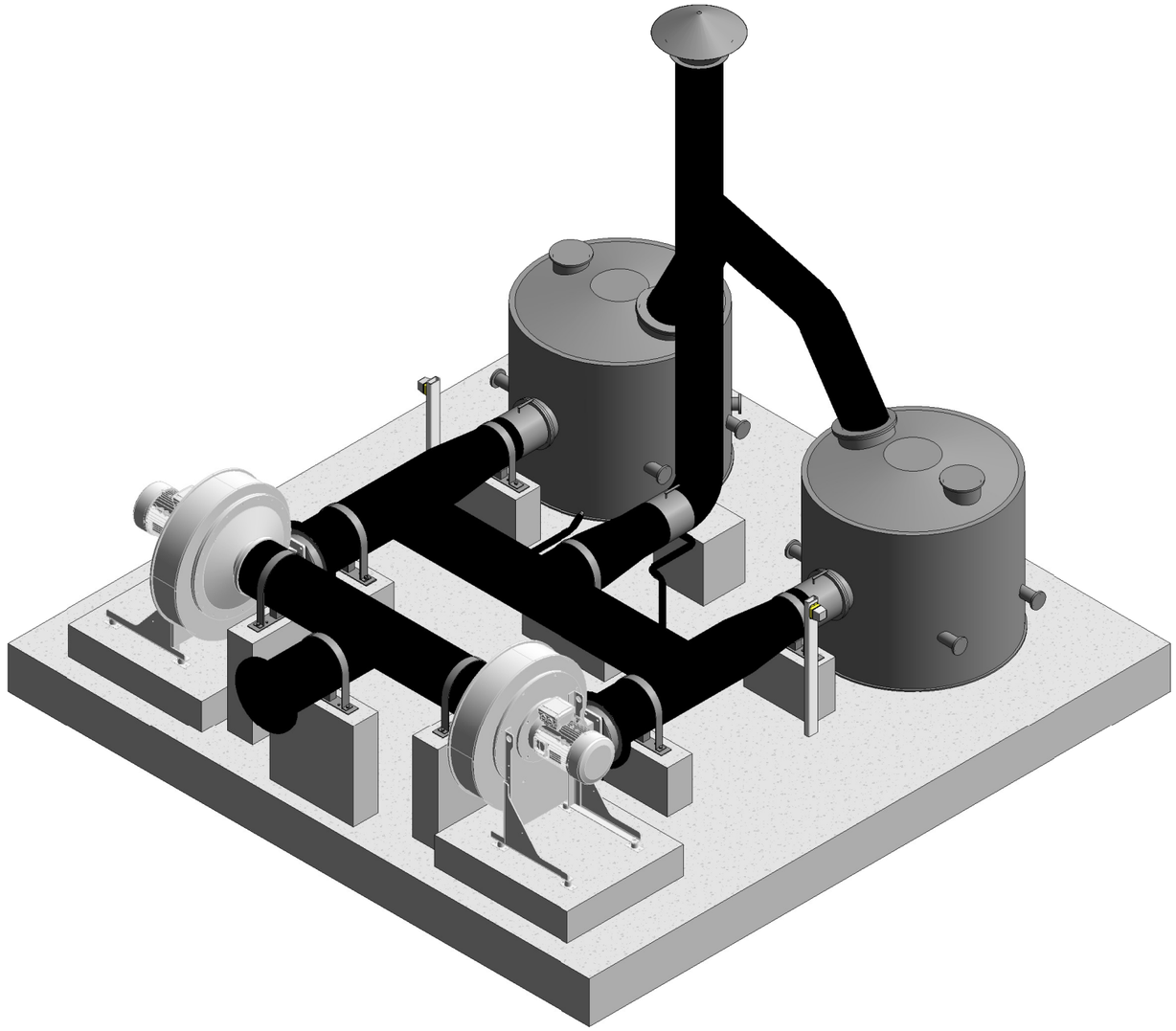

4 3D View of OCU No-1

DO NOT SCALE REDUCED COPY -A3 PRINT

Copyright
This drawing and any design here on is the copyright of the Consultants and must not be reproduced without their written consent.
All drawings remain the property of the Consultants.

THIS DRAWING TO BE READ IN CONJUNCTION WITH ALL RELEVANT ARCHITECTS AND ENGINEERS DRAWINGS.

FIGURED DIMENSIONS ONLY TO BE TAKEN FROM THIS DRAWING.

ALL LEVELS ARE IN METRES AND RELATE TO DATUM AT MALIN HEAD.

THIS DRAWING IS REPRODUCED FROM DIGITAL MAPS:
O.S. MAPS : Scale 1:2,500
O.S. MAPS - Scale 1:1,000
DISCOVERY SERIES - Scale 1:50,000

ALL MAPS ARE REFERENCED TO IRISH NATIONAL GRID (I.T.M.)

REPRODUCED FROM THE ORDNANCE SURVEY OF IRELAND BY PERMISSION OF THE GOVERNMENT. LICENSE NO. 3-3-34.

THIS DRAWING IS A COPY OF AN ELECTRONIC FILE AND IS COPYRIGHT.

ALL DIMENSIONS TO BE CHECKED ON SITE.

ALL MATERIALS AND WORKMANSHIP TO BE IN ACCORDANCE WITH ENGINEERS SPECIFICATION.

IT IS THE CONTRACTORS RESPONSIBILITY TO VERIFY ALL DIMENSIONS AND LEVELS PRIOR TO COMMENCEMENT OF CONSTRUCTION.

Rev:	Suit:	Revision Description	Checked:	Date:
C01	A1	ISSUED FOR EIAR	PJ	28-02-23

Client:
UISCE EIREANN : IRISH WATER
Colvill House
24-26 Talbot St
Dublin 1
Tel:1890 278 278
Intl:+353-1-707 2828
email:info@water.ie
Web:www.water.ie

Project:
CASTLETROY WASTEWATER TREATMENT PLANT

Clients Representative:
J. B. Barry and Partners Limited
Consulting Engineers
Classon House
Dundrum Business
Park Dundrum Road
Dublin 14
Tel: +353 1 485 1400
email: info@jbbarry.ie
web: www.jbbarry.ie

Drawn By:	LHA	Date:	06/12/22
Checked By:	PH	Date:	06/12/22
Approved by:	PJ	Date:	06/12/22
Internal Project No. 20701-JBB-00-XX-DR-Z		Stage	EIAR

Drawing Title:
PROPOSED ODOUR CONTROL UNIT No-1 PLAN AND SECTIONS

Scales: 1 : 50

Drawing No:	Sheet No:	Revision:	Suitability:
20701-JBB-00-XX-DR-Z	-01031	C01	

O:\20 Projects\20701 - Castletroy WwTP (Gate 2-4)\00 WIP\Dwg\EIAR Drawings-March 2023\20701-JBB-00-XX-DR-Z-01031-Proposed Odour Control Unit No-1.rvt